SYSTEM WIRING DIAGRAMS
Courtesy Lamps Circuit
1997 Mercedes-Benz S320

For DIAKOM-AUTO http://www.diakom.ru Taganrog support@diakom.ru (8634)315187

Copyright © 1998 Mitchell Repair Information Company, LLC
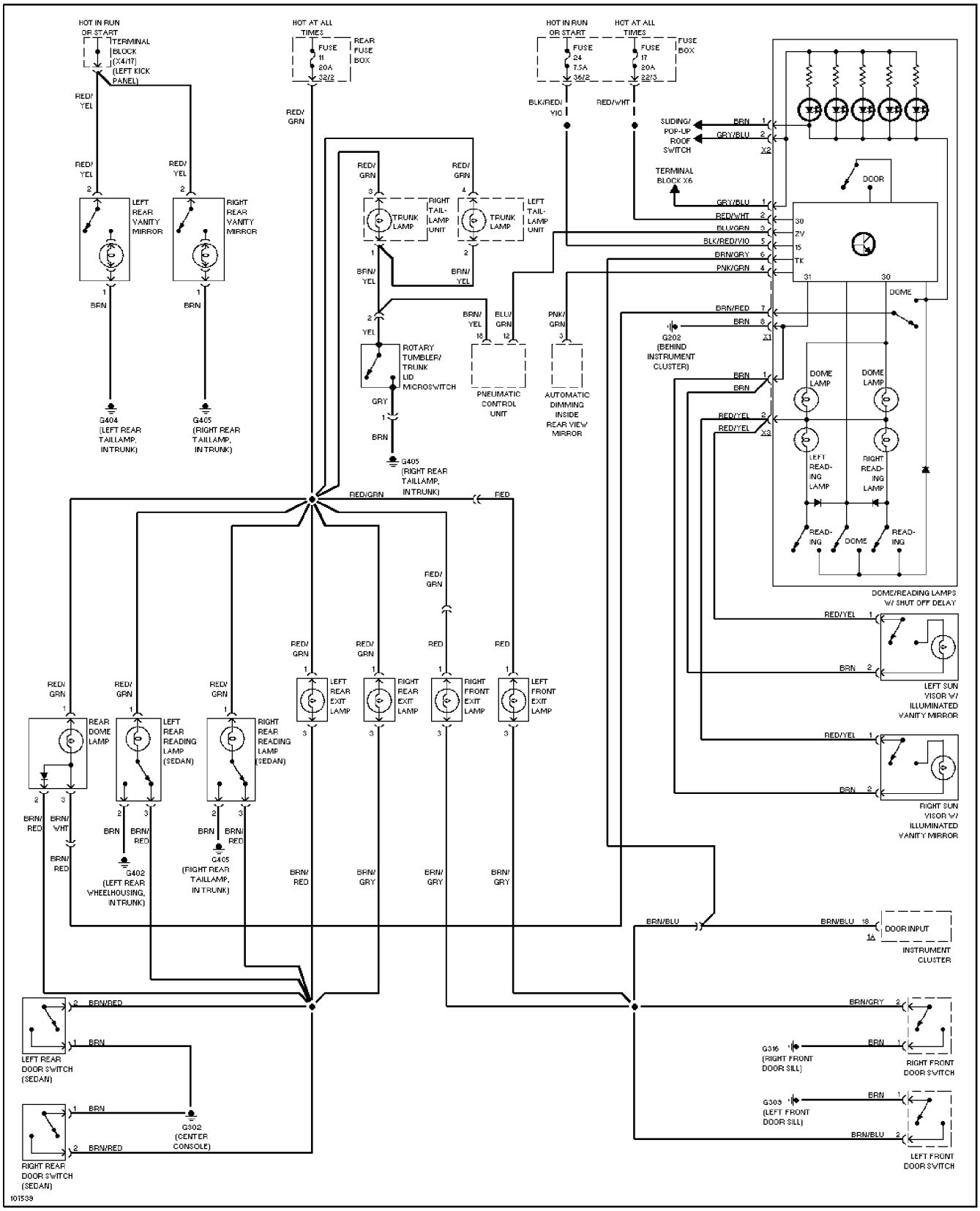
Monday, December 04, 2000 05:59PM